Revista Internacional de Investigación e Innovación Tecnológica

Página principal: www.riiit.com.mx

A Low-Cost Instrumented Vital Signs Testbed for Efficient Pet Sterilization
Cama medidora de signos vitales de bajo costo para una esterilización eficiente en mascotas

Del-Valle-Soto, C.[1], Valdivia, L.J.[1], Rodríguez, A.[1], Rossa-Sierra, A.[1], Velázquez, R.[2]

[1] Facultad de Ingeniería; Universidad Panamericana; C.P. 45010, Zapopan, Jalisco.
[2] Facultad de Ingeniería; Universidad Panamericana; C.P. 20290, Aguascalientes, Aguascalientes.
cvalle@up.edu.mx; lvaldivia@up.edu.mx; anrodriguez@up.edu.mx; lurosa@up.edu.mx; rvelazquez@up.edu.mx

Technological innovation: Smart sterilization bed with vital signs measurement for pet monitoring.
Industrial application area: Electronics and telecommunications.

Received: june 03th, 2021
Accepted: october 19th, 2022

Resumen

Los avances en tecnología han cambiado la forma en que vivimos. Este cambio incluso ha llegado a la industria de las mascotas. A lo largo del tiempo, los seres humanos se han dado cuenta de la importancia de cuidar a los animales. Dentro de estos cuidados, la esterilización es un punto muy importante para los animales domésticos. Los gobiernos de diferentes países han creado campañas de esterilización masiva de animales para mejorar su calidad de vida. Sin embargo, en los países en desarrollo existen presupuestos limitados que afectan directamente la calidad del material y equipo para este propósito. Por esta razón, en este artículo se describe el desarrollo de una cama de esterilización de bajo costo que reducirá el tiempo de proceso, aumentando la seguridad y la calidad. El prototipo incluye sensores de frecuencia cardíaca y oxigenación, lo que permite controlar siempre los síntomas vitales del animal. El sistema de la cama experimental tiene sensores para calcular el peso, la temperatura y heart rate del animal, sin necesidad de moverlo a diferentes lugares y poder monitorearlo continuamente durante la cirugía. Con respecto a la metodología, se analizan tiempos de respuesta promedio de cirugía en animales pequeños (perros y gatos), se comparan parámetros de medición de signos vitales y se verifica eficiencia y costo frente a camas convencionales. Se concluye que la cama medidora propuesta es una alternativa efectiva y económica en intervenciones quirúrgicas en animales pequeños.

Palabras clave: Mascotas, Esterilización, Cama esterilizadora, Signos vitales.

Abstract

Advances in technology have changed the way we live. This change has even reached the pet industry. Humans have realized along time the importance of caring for animals. Within such care, sterilization is a very important point for domestic animals. The governments of different countries have created campaigns for mass sterilization of animals to improve their quality of life. However, in developing countries, there are limited budgets directly affecting the quality of the material and equipment for this purpose. Because of this, in this paper, we show the development of a low-cost sterilization bed that will reduce process time, increasing safety and quality. The prototype encompasses heart rate and oxygenation sensors, allowing the animal's vital symptoms to be always monitored. The experimental bed system has sensors to calculate the weight, temperature, and heart rate of the animal, without the need to move it to different places and to be able to monitor it continuously during surgery. Regarding the methodology, average response times of surgery in small animals (dogs and cats) are analyzed, vital signs measurement parameters are compared, and efficiency and cost are verified compared to conventional beds. It is concluded that the proposed measuring bed is an effective and economical alternative in surgical interventions in small animals.

Key Words: Pets, Sterilization, Testbed, Vital signs.

1. Introduction

In Mexico, as in a significant part of Latin America, dogs and cats, in their character of pets, make up an essential part of affective relationships for people, who generally try to cover their basic needs such as food, household, and minor veterinary care[1].

However, there is another population of these animals, those that lack an owner, who are deprived of this type of attention resulting in small nomadic herds of both dogs and cats that are "adopted" by sectors of the citizens that feed them without appropriating them. Thus, promoting the proliferation of these communities near these areas and other places of coexistence frequented by the population since they represent roughly speaking a constant source of food.

This apparent comfort for dogs and cats' communities without an owner allows their reproduction, generating an increase in the number of individuals. In the case of dogs, a female and her offspring would create an average of 67,000 offspring in six years.[2] This population growth needs to be controlled in order to avoid future animal health crises. Among health issues, problems related to the overpopulation of homeless animals are physical attacks, the transmission of external parasites, mainly hematophagous such as fleas and ticks, to the transmission of infectious diseases causing zoonoses, which represent a public sanitary problem[3].

One solution that some governments have chosen is to euthanize captured unclaimed cats and dogs. However, even with the reforms to existing laws and new laws on animal protection, the number of animals euthanized is not enough. It has certainly been reduced in recent years, and that is why early sterilization is relevant.[4] Another way civil associations have tried to reduce this problem is through shelters and adoption events, which help but cannot cope due to abandoned animals'

overpopulation[5].

Therefore, this paper proposes to address one dimension of this problem: the insufficiency of sterilization campaigns. Implementing a system that helps veterinarians and volunteers to reduce the time invested in each sterilization in order to increase the number of animals sterilized by the campaign and in turn, prevent possible deaths due to carelessness since many of these campaigns are carried out in rather precarious conditions[6].

The most important animal welfare and management problems need a change in community attitude and focus efforts, because of this, this work's main objective is to propose a measuring bed system for the principal vital signs of a domestic animal (generally dog or cat) to predict supply parameters of drugs for sterilization more quickly. This system enables the decrease of surgical intervention times, therefore making the campaigns of animal associations more efficient in Latin American countries.

When the population of "stray animals" grows excessively, not being effectively controlled by the owners or the responsible authorities, it can cause some inconvenience to society and the animals themselves. An example of this is malnutrition, disease, injuries from traffic accidents, fights, or abuse. They are also often exposed to poor animal welfare conditions related to non-humane control and elimination methods by the authorities. Sterilization is a hormonal, chemical, or surgical process through which a dog or cat is deprived of its ability to reproduce, thus preventing its proliferation.

Considering the anatomical and physiological differences between both species' males and females, the following processes are equally different. The most commonly used is the surgical method, based on the removal of male and female genitalia. This is positioned as one of the most effective contraception methods and one of the most stigmatized by the population[7].

In dogs and cats, one of the main advantages offered by sterilization and reducing unwanted pregnancies is eliminating the heating phase and the secretion of aromas that attract males at this stage, seeking to mate with the female in question. On the other hand, the possibility that, if the dog becomes abandoned or runs away, the proliferation cycle of stray dogs and cats continues.[8] Regarding the health of the intervened female, sterilization serves as an auxiliary and preventive in many ailments such as benign and malignant tumors in the reproductive system, representing an improvement in the animal's general health.

In addition, sterilization also reduces the need to go out or look for a partner by howling and whining, typically during periods of heat.[8] In the case of males, sterilization implies better adaptability to home life. It eliminates the sexual frustration caused by the need to find a mate when they perceive a female's smell in heat in a nearby area.

Similarly, by removing this need, the risk of straying the dog or cat is reduced when leaving the house, chasing a female in heat, and losing track of her. Alternatively, it may also happen that they are badly injured in a fight for the right to mate, not having the experience of their peers who live on the streets.

Therefore, sterilization can be seen as a protection measure for society and the pets' well-being and life.[9] Thus, this intervention tackles the problem of overpopulation of dogs and cats directly, improving the family relationship with the pet and its general condition since it eliminates risky behaviors linked to mating cycles[10].

Figure 1. Stainless steel surgery tables (standard bed) with a central channel for veterinary sterilization.

One of the main problems in the sterilization process is the measurement time of the animal's primary parameters and vital signs. Considering that, currently, voluntary organizations and adoption associations carry out periodic sterilization campaigns at low cost. This becomes a matter of vital importance for the agility of the process and the increase of quality surgical operations in one day.[11] We propose a method and product for monitoring and optimizing processes at the time of sterilization by implementing a system that allows the animal's weight to be measured and indicates the necessary amounts of anesthetics and sedatives to apply for surgery.

Subsequently, to provide the possibility of monitoring vital signs in real-time during the operative process, integrating an audible alert if they rise or fall significantly, to avoid deaths due to these factors and at the same time reduce times in these stages. Recent studies are based on medicine, physiology, pharmacology, and neurosciences to treat manipulative surgery in animals efficiently. Recent studies propose surgical beds that facilitate maneuverability taking into consideration the comfort of the animal and the safe setting of the anesthesia supply.[11] This type of equipment is generally composed of a table, pin, and table pedestal, equipped with a surgical holder, instrument holder, tray, and infusion. Currently, sterilization campaigns in Latin American cities have little coverage and low resources. The implementation of qualified and inexpensive equipment for these purposes is of vital importance. There are studies on cat and dog equipment with stainless steel lids or easy-to-sanitize surfaces[13,14]. They describe bed capacity, washing center, inspection area, chemical activation zone, microbial contamination, instrument reception, material traceability, and circuit for transport elements. Other studies include the description of health establishments and the architectural organization of Sterilization Centers[15]. Other studies specify conditions for animal beds or operating tables, which add a constant temperature system and an electric raise and lower function. It is suitable for the operation of small animals, such as sheep, dogs, etc. These works describe a reasonable structure, tight, high performance, easy operation, and practical[16].

The motivation for this work is based on the proposal of vital signs measuring bed that performs the functions of the previous measurements that a veterinary medical team performs before surgery. The veterinary bed or standard bed does not make measurements. The measurements are made with the specialized equipment of the veterinary clinic. Therefore, the work purpose is to propose a bed that has sensors that perform this type of measurement in the same place of surgery and when the veterinarian requires it during surgery.

2. Materials and equipment

The first module comprises an Arduino Nano board, a 20x4-character backlit LCD, an HX711 24-bit A/D module, two weight/force sensors with support for up to 50 kg 2 two-position switches. This system intends to

measure the animals' weight when they arrive at the campaign and instantly calculate the amounts of anesthetic and sedative necessary for the animal under discussion, allowing through the switches to indicate whether it is a dog or a cat and if it is male or female. For the HX711 module readings, it was necessary to establish a bridge with two resistors to close the circuit and keep the negative input of data in a constant medium-high, joining the voltage input and the ground input using a resistance each so that the voltage output is half. The second part is made up of an Arduino Nano board, a heart rate sensor, a waterproof temperature sensor, an ultra-bright red LED, an active buzzer, and a 16x2-character backlit LCD. Table 1 lists the components of the proposed system for the sterilization bed.

Table 1. System components.

Component	Quantity
Arduino Nano board	2
20x4-character backlit LCD	1
HX711 24-bit A/D module	1
weight/force sensors	2
two-position switches	2
heart rate sensor	1
waterproof temperature sensor	1
ultra-bright red LED	1
active buzzer	1
16x2-character backlit LCD	1

Each module is stored inside a 3D-printed housing. This is used inside the surgery room by fixing the sensors to the animal thigh with a bracelet, allowing the heart rate and temperature to be measured in real-time. If either of the two vital signs reaches critical conditions, the buzzer begins to sound an alarm, allowing the doctor to act accordingly. The LED functions as a visual aid, flashing with each beat found by the sensor. We can observe the stepwise construction of the measuring bed proposed in Fig. 2.

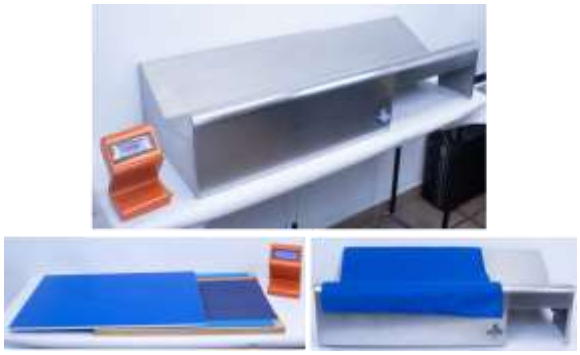

Figure 2. Proposed bed construction.

The complete measuring bed system is shown in Fig. 3, in which we observe a protective plastic canvas for the transfer of the bed when there are extensive sterilization days. In addition, we observed some straps to keep the animal tied during surgery and to be able to monitor its vital signs continually.

Figure 3. Complete extendable bed system.

The system consists of an Arduino Nano board, which contains the scripts to be executed. To measure the pet's weight to be operated, two weight/force sensors with support of up to 50 kg each are included, connected to a 24-bit HX711 Analog/Digital module to perform the conversion of the information-collected sensors above.

This part of the system's connection required a bridge in parallel from the earth and voltage cables, connecting to the negative data input to keep it constant. On the other hand, two 2-position switches are included that serve to indicate if the pet is canine or feline and if it is

female or male. With the weight, this information calculates the anesthetic amount and analgesic that should be applied to the animal.

In addition, for monitoring vital signs during surgery, a waterproof temperature sensor is added to prevent possible damage from splashes during the procedure, and a heart rate sensor, these two are attached to an elastic band that fits the thigh of the pet, as contact with the skin is necessary for the proper functioning of both sensors.

Data is collected continuously and evaluated each time to alert any critical changes during the procedure. A visual and auditory alert system is composed of an ultra-bright 5 mm red LED that lights up with each recorded heartbeat and an active buzzer that emits particular sound patterns when the values exceed a specific limit or fall below a certain number previously specified in the code. Fig. 4 shows the connection system for the weight, temperature, and vital signs sensors.

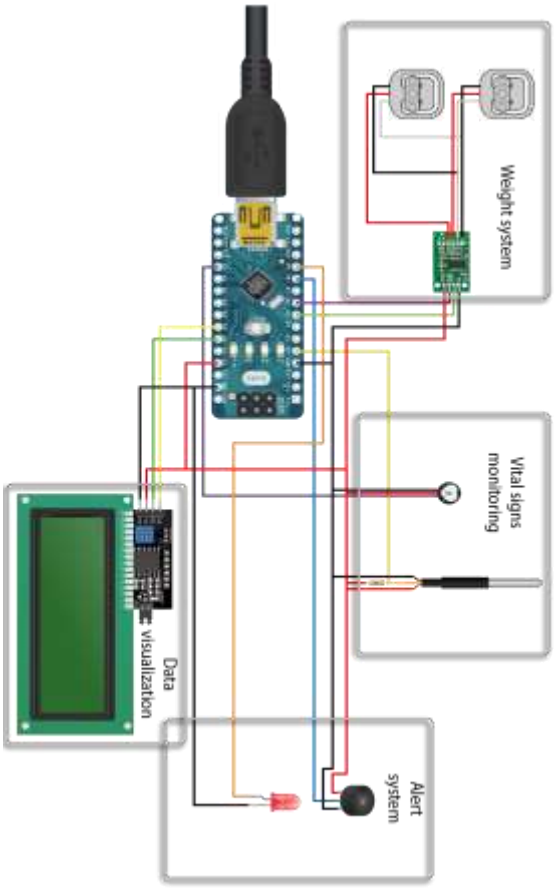

Figure 4. Measuring bed system connections.

3. Experimental methodology

For experimental purposes, the test prototypes were individually connected to a 400-point breadboard, which allowed for functional tests. On the other hand, the anesthetic weighing, and calculation system's feeding was planned to come from a fixed source through a USB connector with 5 Volts and 1 Ampere output. The temperature and heart rate system are planned to be transportable. The power supply was proposed using a portable battery with an output of 5 V and 1 A in operation.

Table 2 compares the parameters with a standard bed used by veterinarians in the city of Guadalajara, Mexico. We analyze metrics that affect the preoperative specifically animal weight, temperature and heart rate.

Table 2. Comparison of measurement and weighing stages prior to sterilization surgery.

Parameter	Proposed bed	Standard bed
Introduction of basic parameters	30 sec	NA
Weight measurement	15 sec	NA
Temperature measurement	15 sec	NA
Rough drug calculation	3 min	NA
Height and motion control	2 min	2 min
Minimal weight bearing	1 min	1 min
Environmental requirements of the place of operation	Store in environments with temperatures between 0 and 30 °C and relative humidity between 15 and 90%	Store in environments with temperatures between 0 and 40 °C and relative humidity between 15 and 90%

The standard veterinary bed has aspects that do Not Apply (NA) because other devices perform these functions independently. Therefore, in a real scenario, the proposed bed has a gain in preoperative time of 4 minutes concerning the standard bed.

Conventional beds of the style shown in Fig. 1 range in price from $750 to $1,400. However, they are not portable; therefore, it is not possible to use them in sterilization campaigns since it is necessary to carry them out in normally remote places. The proposed bed costs only $100 to build (low quantity production) and has various arrangements for weight, temperature, size, and vital signs (heart rate and respiratory before and during surgery) all in the same bed. Moreover, it is small and light enough to be transported.

4. Results and discussion

In order to comparatively validate the measurements between the standard bed used at veterinary clinics and the bed proposed in this work. We have conducted tests by performing thirty (30) sterilization surgeries at a veterinary bed of a clinic in Guadalajara, Mexico, and in the proposed bed in a day of low-cost sterilizations in the same city. Arrangements for the tests were made through a local animal protection association. This comparison was made under very similar conditions of species (cats or dogs only), breed, gender, size, and weight to be equitable in the measurements. We have measured three parameters necessary for the surgical intervention. These metrics are the weight, temperature, and heart rate of the animal. We have measured each of the thirty dogs and cats with the veterinary clinic device and the bed proposed in this work to establish the comparison.

Table 3 presents the animals (dogs and cats) that were taken as a sample for experimentation. Weight, temperature, and heart rate were measured in these animals, first with the veterinary measurement equipment and later with the bed sensors proposed in this work. We present a classification with specifications of species, genus, race, size, and age in order to accurately describe the random sample.

Table 3. Classification of the group of animals for monitoring with the veterinary team and in the proposed bed.

Species	Gender	Race	Size	Age (years)
Dog	male	cocker	small	1
Dog	male	cross-bred	medium	3
Dog	male	beagle	medium	3
Dog	male	pug	small	4
Dog	male	cross-bred	medium	3
Dog	male	pug	small	5
Dog	male	cross-bred	medium	10
Dog	female	beagle	small	9
Dog	female	cross-bred	small	8
Dog	female	bulldog	large	8
Dog	female	retreiver	large	6
Dog	female	cross-bred	small	2
Dog	female	cross-bred	medium	3
Dog	female	cross-bred	large	11
Dog	female	yorkshire	small	8
Cat	male	siamese	medium	5
Cat	male	russian blue	medium	2
Cat	male	domestic	small	2
Cat	male	siamese	small	2
Cat	male	angora	medium	3
Cat	male	domestic	small	1
Cat	male	domestic	large	8
Cat	male	angora	small	10
Cat	female	siamese	medium	7
Cat	female	domestic	small	7
Cat	female	domestic	medium	7
Cat	female	domestic	small	7
Cat	female	persian	small	6
Cat	female	domestic	small	5
Cat	female	domestic	small	9

Fig. 5 illustrates the basic parameters in a typical surgery of cats or dogs indistinctly. We had a difference of 3% between the veterinary scales with our internal weighing of the proposed litter regarding the weight system. Regarding the temperature, we had a difference in the measurement of 0.5% and we obtained a difference of 0.8% with respect to heart rate measurement.

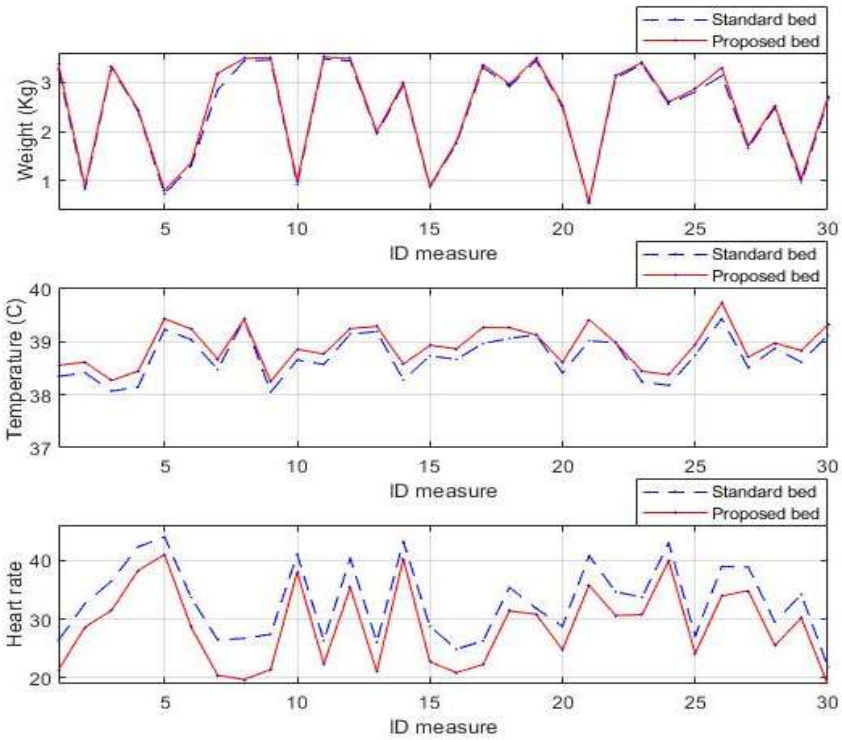

Figure 5. Comparison of basic measurements between the standard veterinary bed and the bed proposed in this work.

In Fig. 6 we observe the comparative statistical distribution for the 30 surgeries in a standard veterinary bed and the proposed bed. The weight, temperature, and heart rate measurements are important parameters that help the distribution of the sterilization days and the distribution of medicines for the animals. This analysis observes how most of the data behaves (the values belonging to the boxes). The data show a similar response behavior of the proposed litter concerning the measurement in the veterinary clinic. For the weight, we have an error of 0.2%; for temperature, an error of 0.9%, and heart rate, an error of 0.3%.

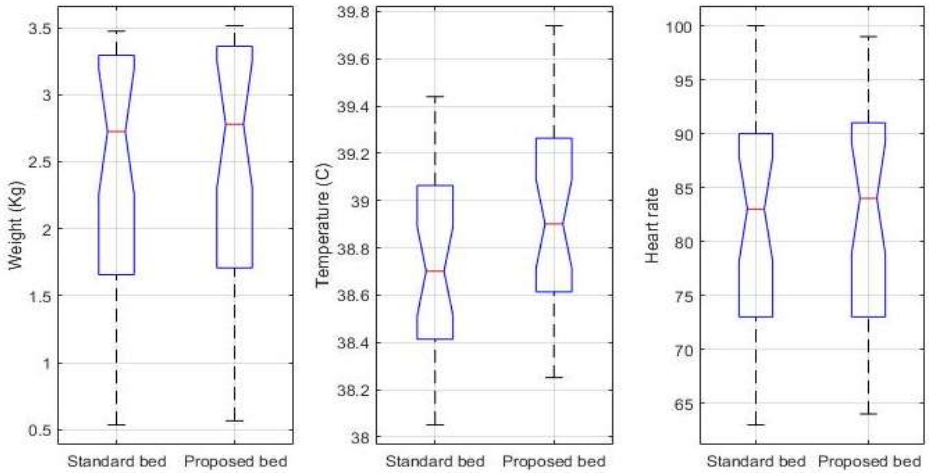

Figure 6. Statistical behavior of weight, temperature and heart rate data.

Fig. 7 shows the data compared with the error (green dotted line) and the mean (red dotted line). We only have two outliers that fall outside the standard deviation range (0.27 and 0.11) for weight. Regarding temperature, there are eight outliers, in which the maximum deviation is 0.21, which is not much. Moreover, for the heart rate, we only have an outlier that is 1 from the mean. Thus, the variability of the error remains within normal ranges. This represents that most of the errors within the green lines are "normal" errors for these measurements, which the veterinarian makes to proceed with the surgery. These variations mean that the measurements of the bed proposed in this work are consistent so that the bed will make correct measurements, with a small margin of error but reliable.

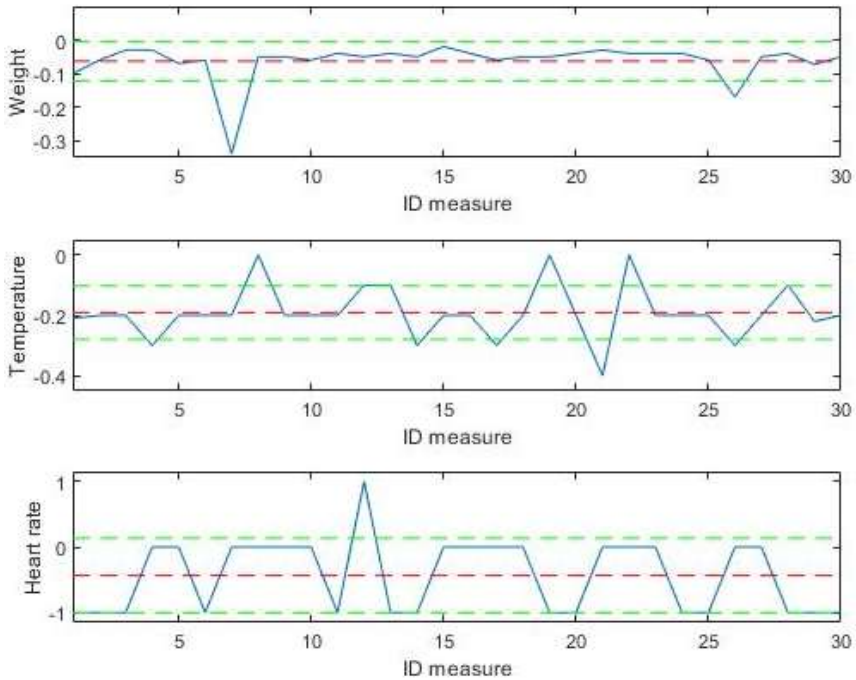

Figure 7. Error and standard deviation of weight, temperature and heart rate data.

A series of minimum or basic recommendations related to the methods considers surgical sterilization in a sterilization process. We can structure these proposals in four essential points:

1. Preoperative preparation of the patient.
2. Anesthesia and analgesia.
3. Surgical procedure.
4. Post-surgical protocols.

Table 2. Comparison of the four points in surgical sterilization for cats.

Parameter	Proposed bed	Standard bed
Preoperative preparation of the patient	4.5 min	9 min
Anesthesia and analgesia	2 min	2 min
Surgical procedure	9 min	10 min
Post-surgical protocols	2 min	3 min

Table 2 summarizes the four stages of standard sterilization for cats and compares the proposed bed with the veterinary bed. We found that the proposed bed reduces the Preoperative preparation of the patient stage by 50%. Furthermore, it presents a reduction of 10% in the other stages approximately.

5. Conclusion

We observe that thanks to the research conducted in parallel with the development of the systems, a reduction in the sterilization time is possible.

A longitudinal study is proposed to monitor the populations of abandoned cats and dogs and the campaigns' scope to appreciate the real impact of this system on the problems raised at the beginning of this study. With the proposed measuring bed, dogs and cats' sterilization process is made more efficient in terms of human and material resources.

This bed will help to offer more global services with more efficient results and, at the same time, lower the risks for the patient (animal). Preoperative time is reduced, and constant monitoring of the animal is maintained during surgery. The result is the global enhancement of veterinary services by establishing quality and service principles.

Future work can focus, such as on a keyboard that, when turned on, the veterinarian can put the number of ingredients necessary for sterilization per kilo of the medicine that will be required for that intervention.

6. References

1. Offor, Iyan. "Animals and the Impact of Trade Law and Policy: A Global Animal Law Question". Transnational Environmental Law 9.2 (2020): 239-262.

2. Riffert, Renata D., et al. "Canine and feline dimensioning for the implementation of a population control program in the City of Guarapuava, Paraná, Brazil". International Journal of Development Research 10.03 (2020): 34239-34242.

3. Griffiths, A. O., and A. Silberberg. "Stray animals: their impact on a community" Modern veterinary practice 56.4 (1975): 255-256.

4. Galvis, Jason Onell Ardila, et al. "Monitoring techniques in the capture and adoption of dogs and cats" Geospatial Health (2015).

5. Doi, Kazushige, and Jean-Baptiste Pettier. "The ambiguous status of companion animals in rapidly changing societies" Protecting the Weak in East Asia: Framing, Mobilisation and Institutionalisation (2018).

6. Guenther, Katja M. "Volunteers' Power and Resistance in the Struggle for Shelter Animal Survival" Sociological Forum. Vol. 32. No. 4. 2017.

7. Guttilla, Darcee A., and Paul Stapp. "Effects of sterilization on movements of feral cats at a wildland-urban interface" Journal of Mammalogy 91.2 (2010): 482-489.

8. Dias, Ricardo Augusto, et al. "Dog and cat management through sterilization: Implications for population dynamics and veterinary public policies". Preventive veterinary medicine 122.1-2 (2015): 154-163.

9. McKay, Stacey A., Mark J. Farnworth, and Natalie K. Waran. "Current attitudes toward, and incidence of, sterilization of cats and dogs by caregivers (owners) in Auckland, New Zealand". Journal of Applied Animal Welfare Science 12.4 (2009): 331-344.

10. Howe, Lisa M. "Surgical methods of contraception and sterilization". Theriogenology 66.3 (2006): 500-509.

11. Root Kustritz, M. V. "Effects of surgical

sterilization on canine and feline health and on society." Reproduction in domestic animals 47 (2012): 214-222.

12. Devan, R. K. "Surgical Models of Laboratory Animals". Essentials of Laboratory Animal Science: Principles and Practices. Springer, Singapore, 2021. 783-806.

13. Dias, R. A., Baquero, O. S., Guilloux, A. G. A., Moretti, C. F., de Lucca, T., Rodrigues, R. C. A., ... & Amaku, M. “Dog and cat management through sterilization: Implications for population dynamics and veterinary public policies”. Preventive veterinary medicine, 122(2015): 154-163.

14. Parascandola, A. Emergency Animal Sheltering. Field Manual for Small Animal Medicine, (2018): 589-620.

15. Collinson, A., Brennan, M. L., Dean, R. S., & Stavisky, J. Priorities for Research into the Impact of Canine Surgical Sterilisation Programmes for Free-Roaming Dogs: An International Priority Setting Partnership. Animals, 11(2021): 2250.

16. Shimabukuro, P. M. S., Duarte, M. L., Imoto, A. M., Atallah, Á. N., Franco, E. S. B., Peccin, M. S., & Taminato, M. Manufacturer 100% Virgin Polyester Spun Yarn for Sewing Thread 3000y. Sao Paulo Medical Journal, 138(2020): 505-514.